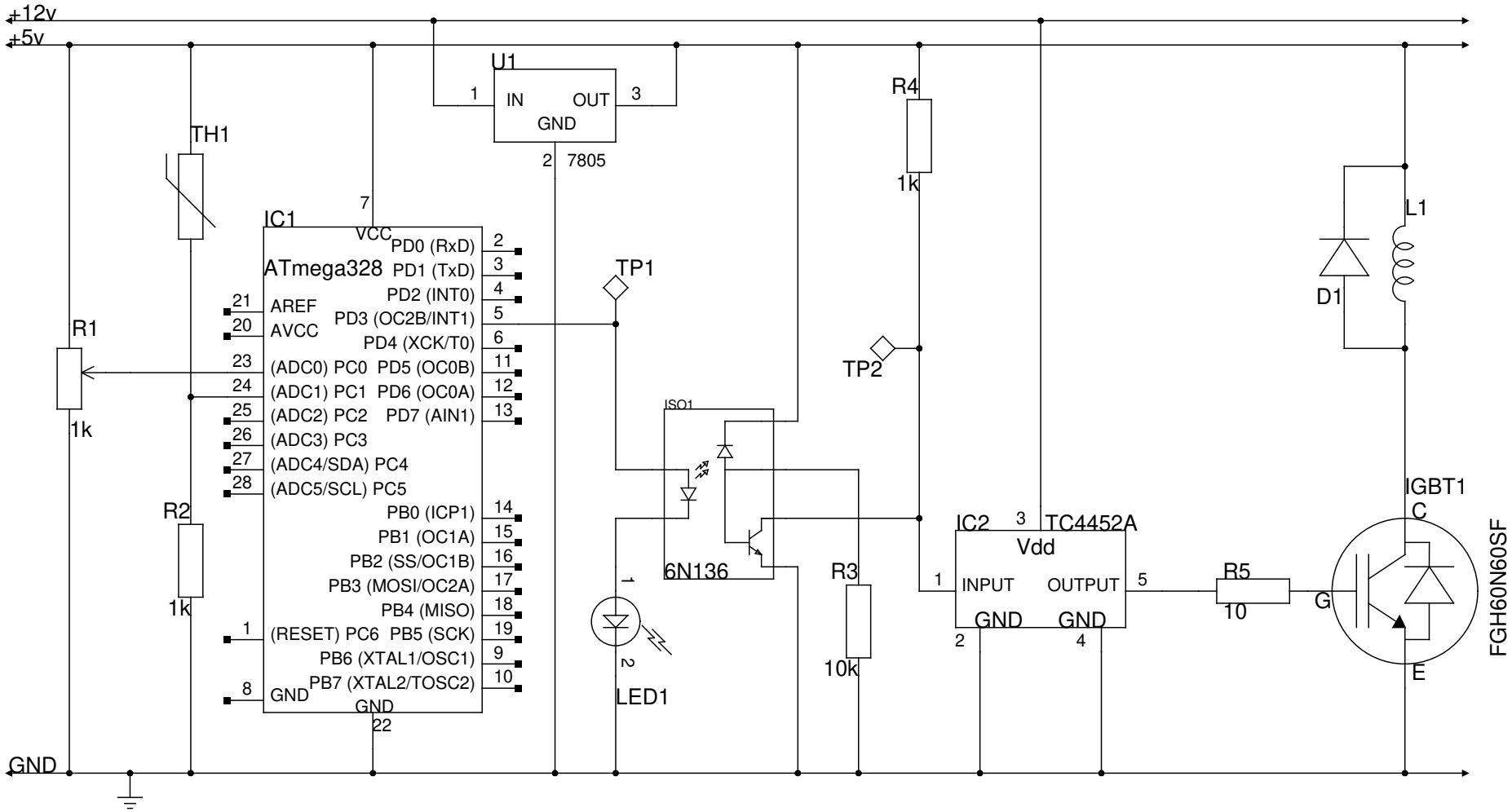

TITLE: Solenoid test | AUTHOR: Graham North | CREATED: 25–Jan–2020