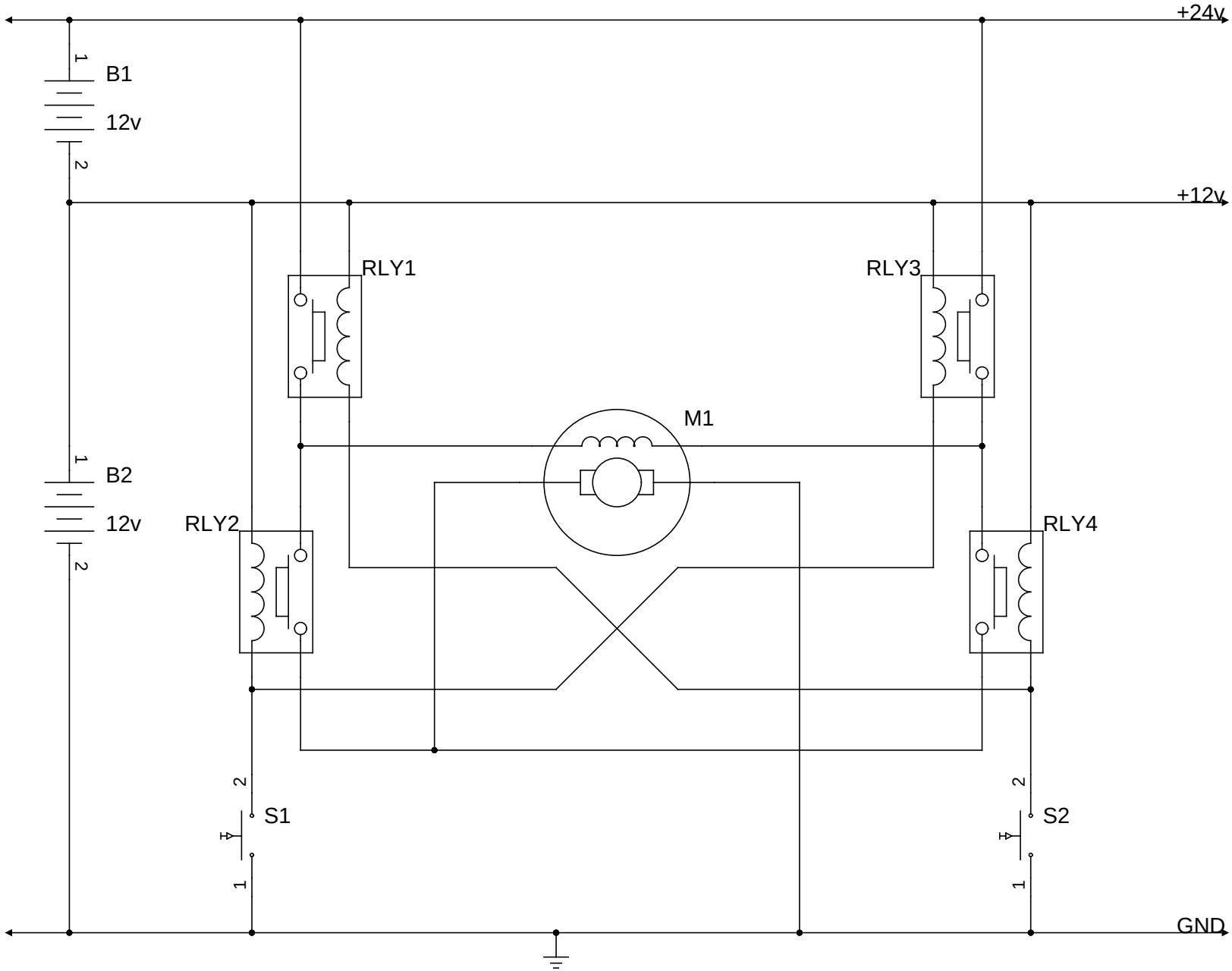

TITLE: Simple Controller (milk float) CREATED:26−January−2013 AUTHOR:Graham North NOTES: