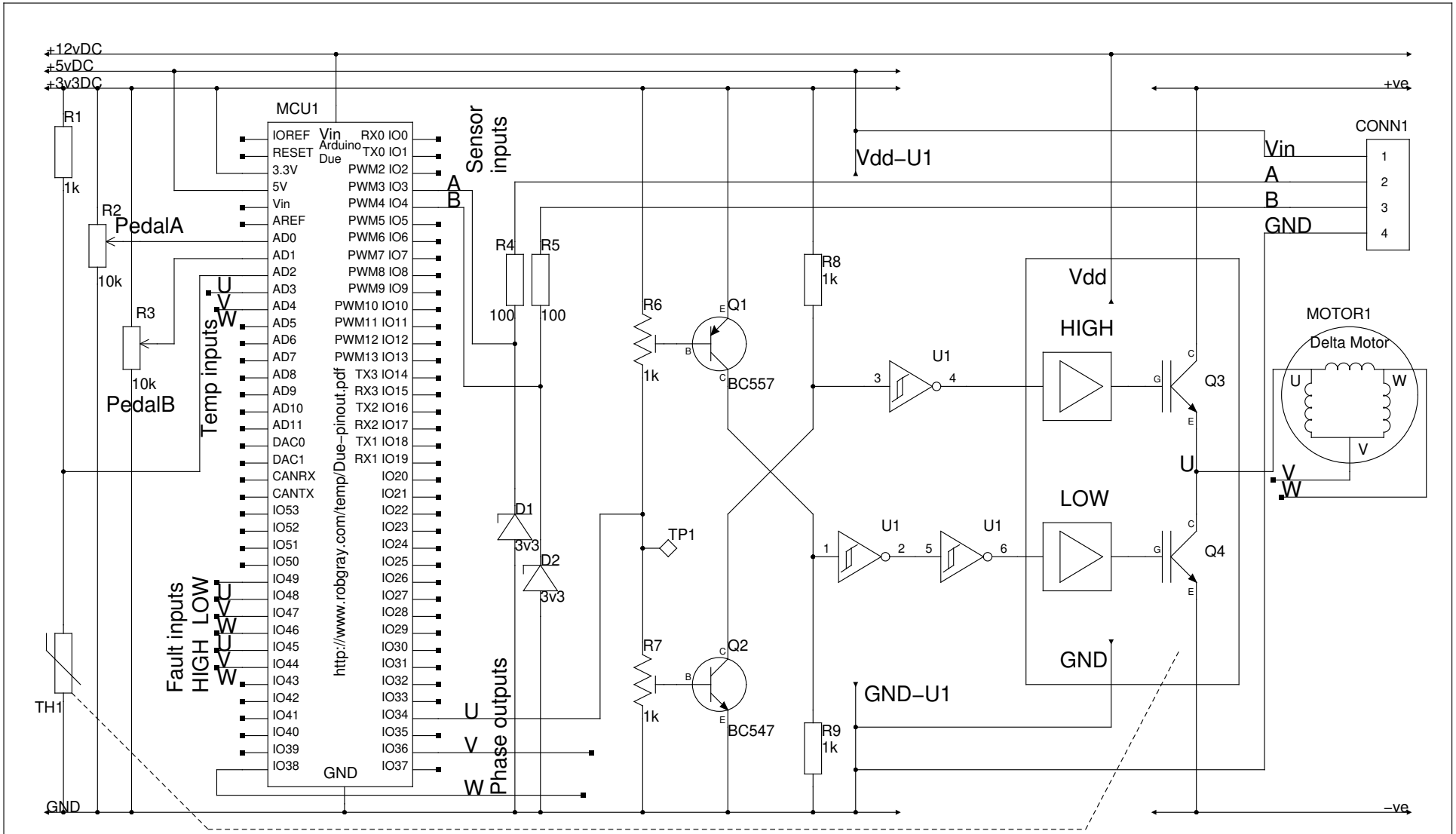

TITLE: Trinary Tesla Invertor with Sensor AUTHOR:Graham North CREATED:4th−November−2019