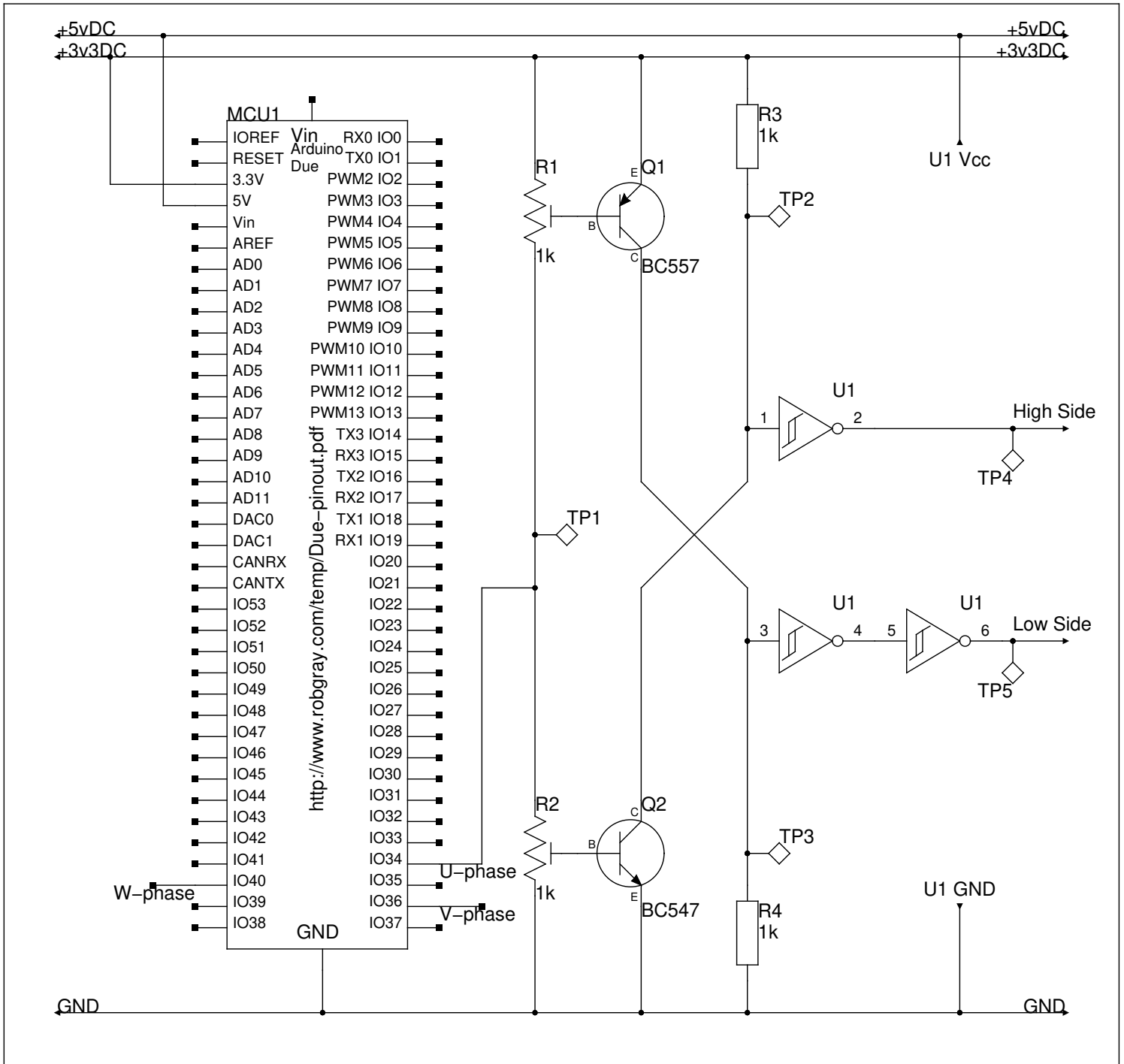

TITLE: Due Trinary Inverter Test AUTHOR:Graham North CREATED:23rd-Oct-2019